BANGLADESH UNIVERSITY OF ENGINEERING AND TECHNOLOGY
DEPARTMENT OF ELECTRICAL AND ELECTRONIC ENGINEERING

EEE 316 (July 2025)

Power Electronics Laboratory

Final Project Report

Section: C2 Group: 03

Design and Implementation of a H bridge DC to AC Inverter

Course Instructors:

Rafid Hassan Palash, Lecturer
Sayed Mohammad Tawsif Arefin, Part-Time Lecturer

Signature of Instructor: _____

Academic Honesty Statement:

IMPORTANT! Please carefully read and sign the Academic Honesty Statement, below. Type the student ID and name, and put your signature. *You will not receive credit for this project experiment unless this statement is signed in the presence of your lab instructor.*

"In signing this statement, We hereby certify that the work on this project is our own and that we have not copied the work of any other students (past or present), and cited all relevant sources while completing this project. We understand that if we fail to honor this agreement, We will each receive a score of ZERO for this project and be subject to failure of this course."

Signature: Tonmoy **Full Name: Tonmoy Deb** **Student ID: 2106177**	**Signature:** মুশফিক **Full Name: Mushfiqur Rahman** **Student ID: 2106181**
Signature: Chayan. **Full Name: Chayan Paul** **Student ID: 2106182**	**Signature:** Shamin **Full Name: Shamin Yeaser** **Student ID: 2106183**
Signature: Kayes **Full Name: Kayes Sami Malitha** **Student ID: 2106184**	

Table of Contents

1 1

2 1

3 2

3.1 2

3.1.1 2

3.1.2 **Error! Bookmark not defined.**

3.1.3 **Error! Bookmark not defined.**

3.1.4 **Error! Bookmark not defined.**

3.2 **Error! Bookmark not defined.**

3.3 **Error! Bookmark not defined.**

3.4 **Error! Bookmark not defined.**

3.5 **Error! Bookmark not defined.**

4 9

4.1 9

5 9

5.1 11

5.2 12

5.2.1 **Error! Bookmark not defined.**

5.2.2 **Error! Bookmark not defined.**

5.2.3 **Error! Bookmark not defined.**

5.3 12

5.3.1 **Error! Bookmark not defined.**

5.3.2 **Error! Bookmark not defined.**

5.3.3 **Error! Bookmark not defined.**

5.3.4 **Error! Bookmark not defined.**

5.4 14

5.5 14

5.5.1 **Error! Bookmark not defined.**

5.5.2 **Error! Bookmark not defined.**

5.5.3 **Error! Bookmark not defined.**

5.6 15

5.7 15

6 15

6.1 16

6.2 16

6.3 17

6.4 17

7 18

7.1 18

7.2 18

7.3 18

7.4 18

8 19

8.1 19

8.2 20

8.3 20

9 20

10 20

1 Abstract

This project presents the design and implementation of a 12V DC to 220V AC pure sine wave inverter using an SPWM-based control technique. The system utilizes the EGS002 SPWM module for generating sinusoidal pulse width modulation signals, which are used to drive an H-bridge inverter constructed with IRF3205 N-channel MOSFET devices. The inverter converts low-voltage DC power from a battery into high-voltage AC suitable for household loads.

A step-up transformer is employed to increase the voltage from 12V to 220V, while an output LC filtering mechanism ensures waveform smoothing and reduction of harmonic distortion.

The designed inverter demonstrates efficient DC-AC conversion with reduced Total Harmonic Distortion (THD), making it suitable for sensitive electronic devices. This project highlights the practical implementation of power electronics concepts including PWM control, switching devices, and power conversion.

2 Introduction

With the growing need for continuous and reliable power in both residential and industrial sectors, inverters have become indispensable. This is especially true in countries like Bangladesh, where power interruptions are common, making efficient DC-to-AC conversion systems highly necessary.

Fig 2.1: DC to AC Converter

The aim of this project is to develop a 12V DC to 220V AC inverter that generates a near-sinusoidal output using Sinusoidal Pulse Width Modulation (SPWM) techniques. Conventional square wave inverters are associated with significant drawbacks, including high harmonic distortion, lower efficiency, and poor compatibility with sensitive electronic equipment. To overcome these limitations, an SPWM-based inverter system is adopted in this design.

This project can be classified as a Complex Engineering Problem due to several technical challenges, including:

- The nonlinear switching characteristics of power electronic components
- The presence of harmonic distortion and the need for effective filtering methods
- Thermal management issues and efficiency optimization

- The integration of control circuitry, power electronics, and feedback mechanisms

This approach ensures improved performance, better waveform quality, and enhanced compatibility with modern electrical loads.

3 Design

3.1 Problem Formulation (PO(b))

3.1.1 Identification of Scope

The project aims to:

- Convert 12V DC to 220V AC
- Generate a pure sine wave output
- Maintain voltage stability under load
- Ensure protection (thermal, electrical)

3.1.2 Literature Review

Inverter technology has evolved significantly from simple square wave designs to advanced sinusoidal systems. Early square wave inverters were easy to implement but suffered from high harmonic distortion and poor compatibility with sensitive loads. To improve performance, modified sine wave inverters were introduced, offering better waveform approximation but still containing noticeable harmonics.

To overcome these limitations, Sinusoidal Pulse Width Modulation (SPWM) techniques have been widely adopted. SPWM generates high-frequency switching pulses whose duty cycle follows a sinusoidal pattern. After filtering, these pulses produce a waveform close to a pure sine wave, resulting in lower harmonic distortion and improved efficiency.

Modern inverter systems often use integrated control modules such as the EGS002 SPWM module [1], which simplifies implementation by combining SPWM generation, gate driving, and protection features. The power stage typically uses MOSFET-based H-bridge configurations with devices like the IRF3205 N-channel MOSFET, known for their high efficiency and fast switching capability.

Output filtering using capacitors and inductive elements helps remove high-frequency harmonics, producing a smooth AC waveform. Additionally, thermal management and protection mechanisms are essential to ensure reliable operation.

Overall, SPWM-based inverter designs provide a balanced solution in terms of efficiency, waveform quality, and implementation complexity, making them suitable for modern power conversion applications.

3.1.3 Formulation of Problem

The objective of this project is to design and implement a system that converts a low-voltage DC input (12V) into a high-voltage AC output (220V, 50 Hz) with a waveform close to a pure sine wave. The system must operate efficiently and maintain stable output under different loading conditions.

The problem can be defined as converting:

$$V_{in} = 12V\ DC \rightarrow V_{out} \approx 220V\ AC\ ,\ f = 50Hz$$

The inverter should satisfy the following requirements:

- Low Total Harmonic Distortion (THD)
- Stable output voltage under varying load
- High efficiency and reliable operation

To achieve this, the system must:

- Generate switching signals using SPWM technique
- Convert DC to AC using an H-bridge configuration
- Step up the voltage using a transformer
- Filter high-frequency components to obtain a smooth waveform

In addition, practical constraints such as switching losses, thermal effects, and voltage regulation must be considered. Therefore, the problem involves integrating control, power electronics, and filtering techniques to develop an efficient and reliable inverter system.

3.1.4 Analysis

The proposed inverter operates using SPWM switching, where a high-frequency carrier signal is modulated by a low-frequency sinusoidal reference. The EGS002 SPWM module generates four complementary PWM signals to drive the H-bridge.

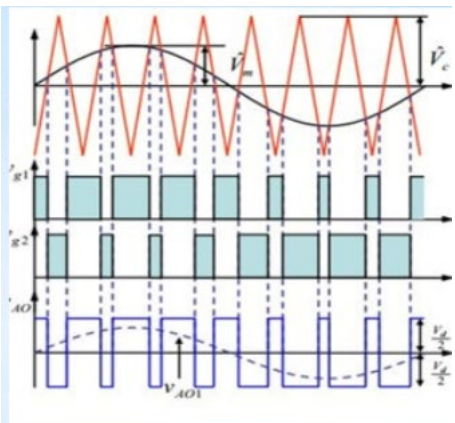

Fig 3.1: Sinusoidal Pulse Width Generation

The output voltage depends on the modulation index and input DC voltage:

$$V_{out}(rms) = m_a \cdot (V_{dc}/1.414)$$

The H-bridge converts DC into alternating voltage by switching MOSFET pairs [2]. The transformer then steps up the voltage to 220V. High-frequency harmonics generated by switching are filtered using passive components, resulting in a near-sinusoidal waveform.

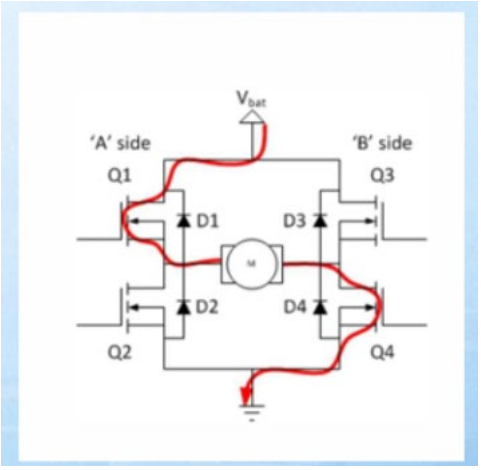

Fig 3.2: H-Bridge Circuit

Efficiency is determined by switching losses, conduction losses, and transformer losses. Proper design ensures reduced harmonic distortion and stable output under load.

3.2 Design Method (PO(a))

The design is based on fundamental principles of power electronics, control systems, and circuit theory.

We used egs002 module in this project . The EGS002 is a ready-made control module used to generate SPWM (Sinusoidal Pulse Width Modulation) signals for pure sine wave inverters.It is widely used in inverter projects because it simplifies control design.

Inside EGS002 :

The module mainly contains:

1. EG8010

- Core of the system
- Generates pure sine SPWM signals
- Provides:
  - 50Hz / 60Hz selectable output
  - Dead time control

- Soft start
- Protection logic

2. IR2110

- Drives MOSFETs in full-bridge inverter
- Converts logic signals → high-power gate signals

Fig : EGS002 module

How EGS002 Generates SPWM :

Step-by-step :

1. **Sine Wave Reference (inside EG8010)**
   - Stored digitally (lookup table)
2. **Carrier Signal (high frequency)**
   - Internal clock creates switching frequency (~20kHz)
3. **Comparison**
   - Sine reference vs carrier →SPWM pulses
4. **Output Signals**
   - 4 PWM outputs for H-bridge:
     - HO1, LO1
     - HO2, LO2
5. **Dead Time Added**
   - Prevents short circuit in MOSFETs
6. **Driver Stage**
   - IR2110 amplifies signals →drives MOSFET gates

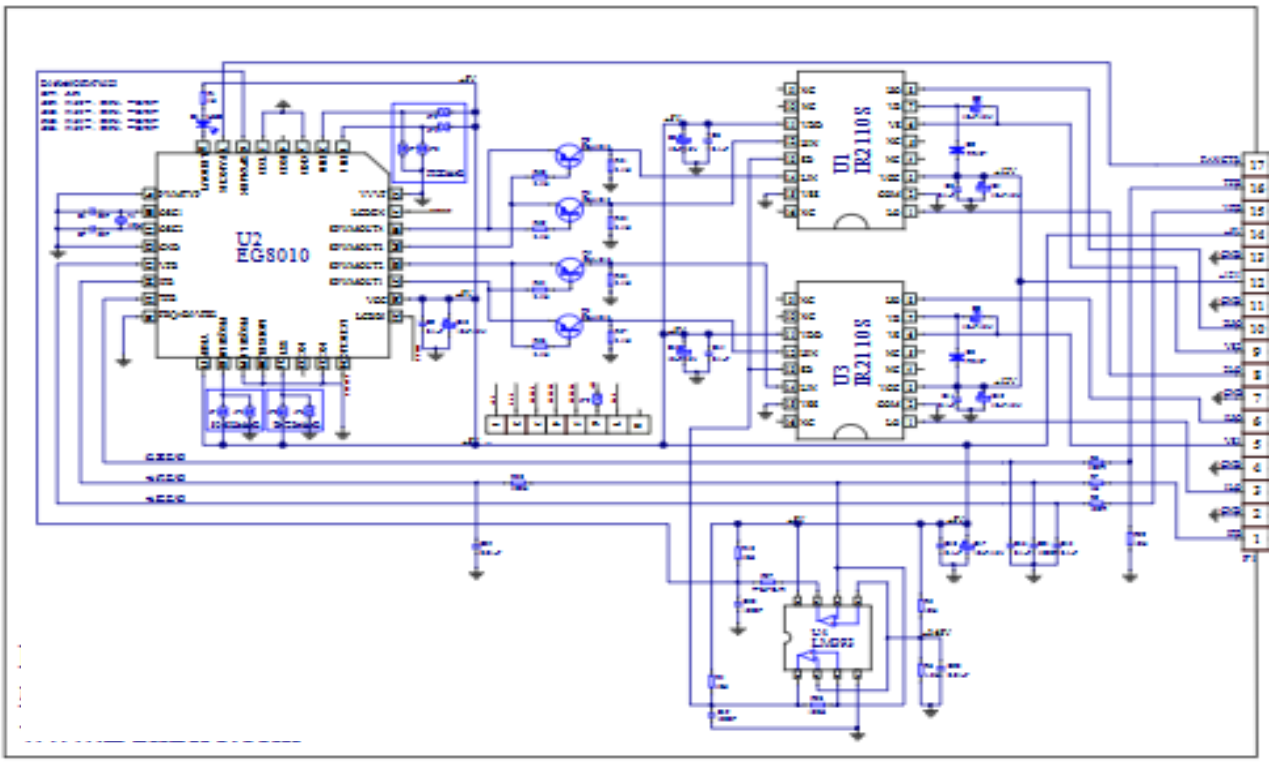

Fig : EGS002 internal circuit

SPWM is used to generate a sinusoidal output by varying the duty cycle of high-frequency pulses [3]:

$$D(t)=0.5 *(1+\sin(\omega t))$$

The inverter uses an H-bridge topology with IRF3205 N-channel MOSFET devices to switch the DC input. The transformer steps up the voltage according to:

$$V_p / V_s = N_p / N_s$$

Filtering is achieved using capacitors and inductive effects of the transformer, removing high-frequency components. Efficiency is calculated as:

$$\eta = P_{in} / P_{out} \times 100\%$$

This method ensures a balance between efficiency, waveform quality, and implementation simplicity.

3.3 Circuit Diagram

The circuit consists of several functional blocks:

- DC input stage with protection
- Voltage regulation using 7805
- SPWM generation using EGS002 SPWM module
- H-bridge inverter using MOSFETs

- Step-up transformer
- Output filtering capacitor
- Feedback and protection circuits

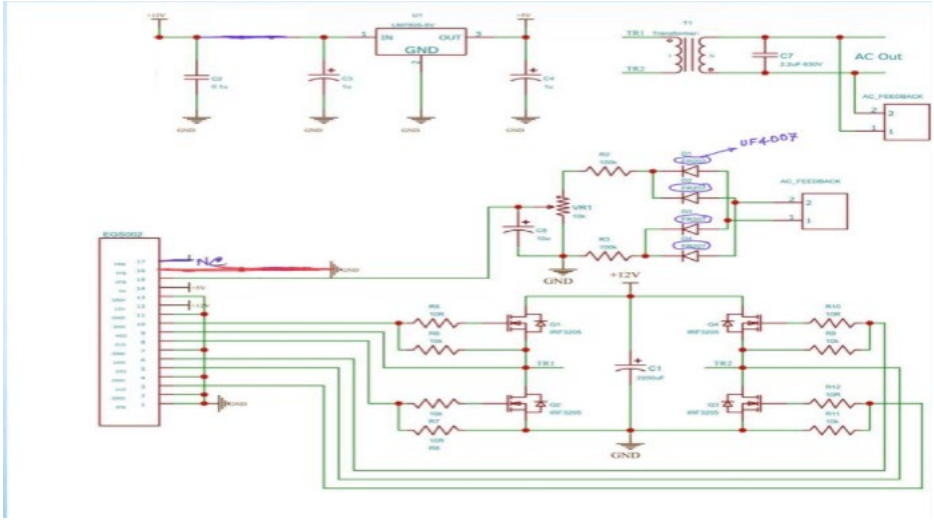

Fig 3.3: Full DC To AC Circuit Diagram

Each block works together to convert 12V DC into stable 220V AC output.

3.4 Simulation Model

The inverter is simulated using software : Proteus. The simulation includes SPWM generation, switching behavior of MOSFETs, and transformer operation. As there was no EGS-002 module in Proteus, we have simulated it with the help of arduino.

Simulation Diagram:

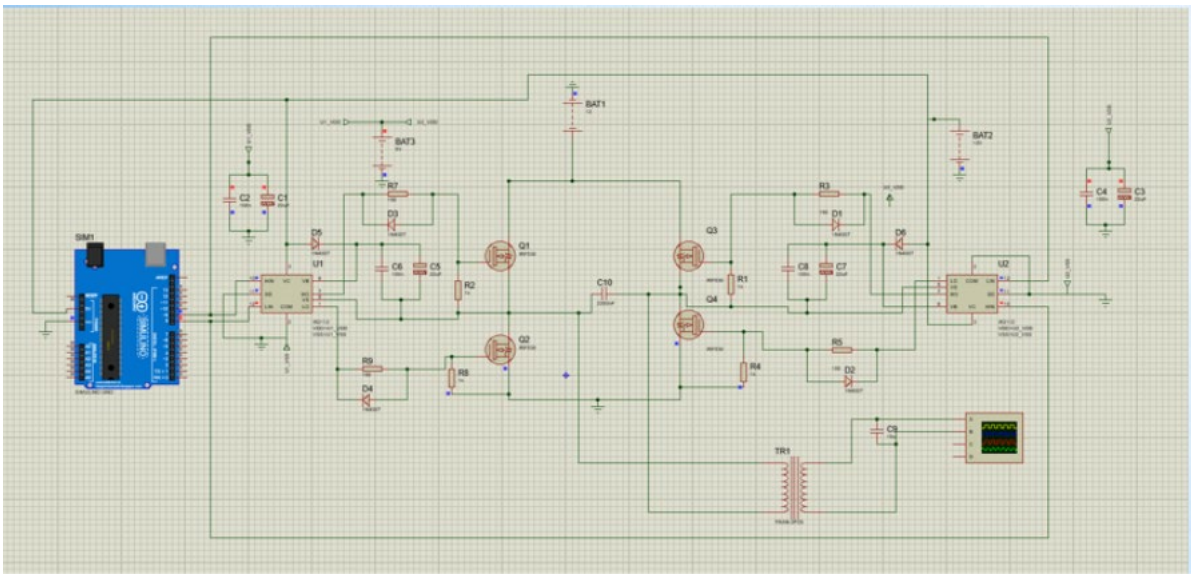

Fig 3.4: Simulation Circuit Diagram in Proteus

Simulation helps in:

- Verifying waveform shape
- Observing switching signals
- Analyzing harmonic content
- Predicting output voltage

Simulated Output:

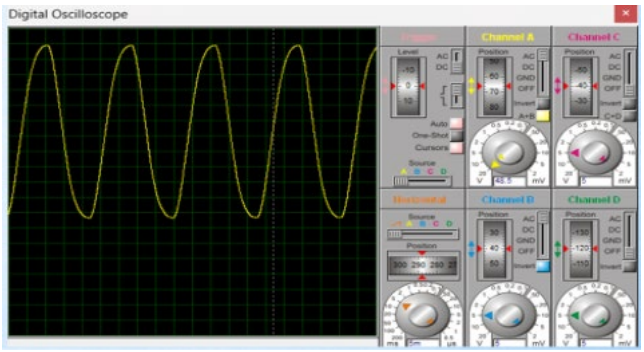

Fig 3.5: Simulation Output

Results typically show high-frequency PWM pulses that are filtered into a sinusoidal waveform.

3.5 CAD/Hardware Design

The hardware of the inverter is implemented on a veroboard (stripboard) using discrete components. The design focuses on simplicity, reliability, and proper handling of high current and high voltage sections.

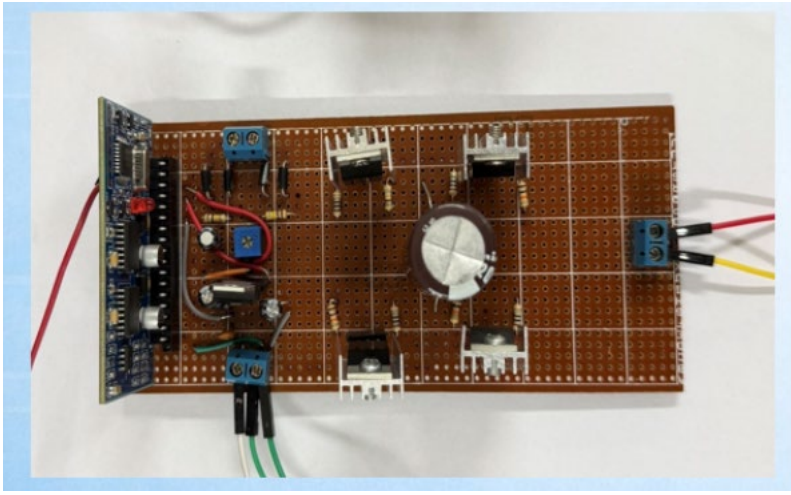

Fig 3.6: Original Circuit in Veroboard

The power stage consists of an H-bridge configuration using IRF3205 N-channel MOSFET devices, which are mounted on heat sinks to ensure effective thermal dissipation [4]. Due to high current flow in the inverter, thick copper wires are used for connections between the battery, MOSFETs, and transformer to minimize resistive losses.

The control section is built around the EGS002 SPWM module, which is supplied with a regulated 5V using a voltage regulator (7805). Proper separation between the low-power control circuit and high-power switching section is maintained to reduce noise and interference.

The step - up transformer (0–9V, ≥400W) is externally connected to the veroboard, and its primary is driven by the H- bridge. A high- voltage capacitor is placed at the output to smooth the waveform.

Special care is taken in the veroboard layout to:

- Keep high-current paths short and thick
- Avoid crossing of control and power lines
- Ensure proper insulation between high-voltage and low-voltage sections

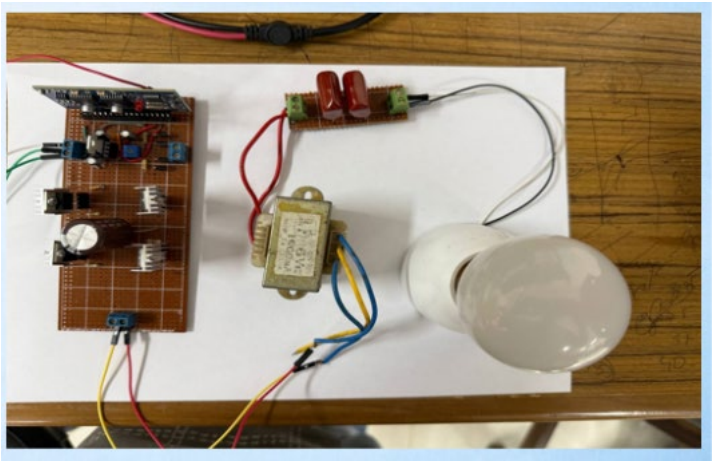

Fig 3.7: Full Setup

Overall, the hardware design provides a compact and cost-effective implementation of the inverter while maintaining safety and performance.

4 Implementation

4.1 Description

- The output waveform was observed using an oscilloscope during inverter operation.
- The initial output showed high-frequency SPWM pulses with varying pulse widths.
- These pulses follow a sinusoidal envelope, confirming proper SPWM generation by the EGS002 module.

- After filtering, the waveform approximates nearly sine wave.
- The output frequency was measured to be approximately 50 Hz, matching the design specification.
- Minor switching noise and ripple were observed due to high-frequency components.

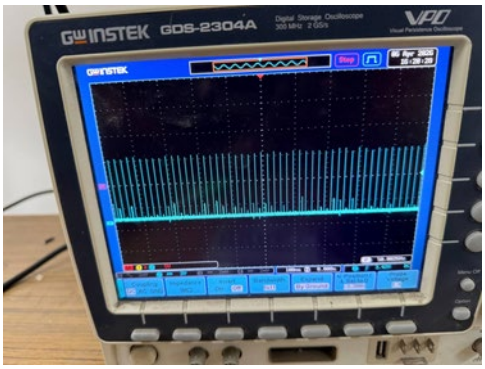

Fig : Gate Pulse

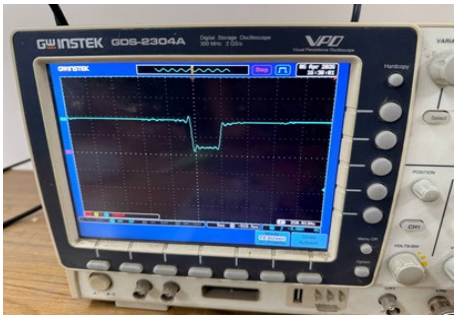

Fig : Gate Pulse cheaking

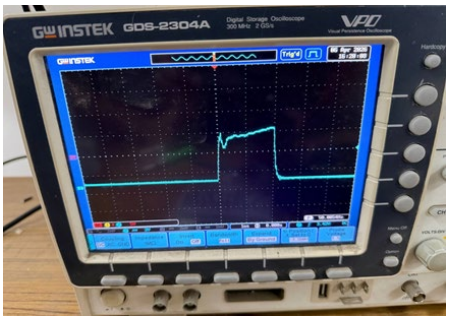

Fig : Gate Pulse cheaking

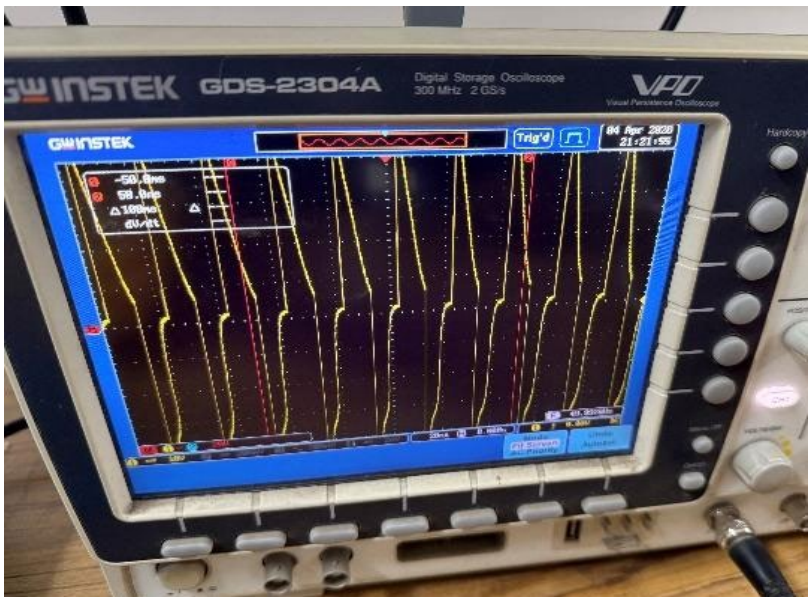

Fig: Final Output Waveform from Oscilloscope

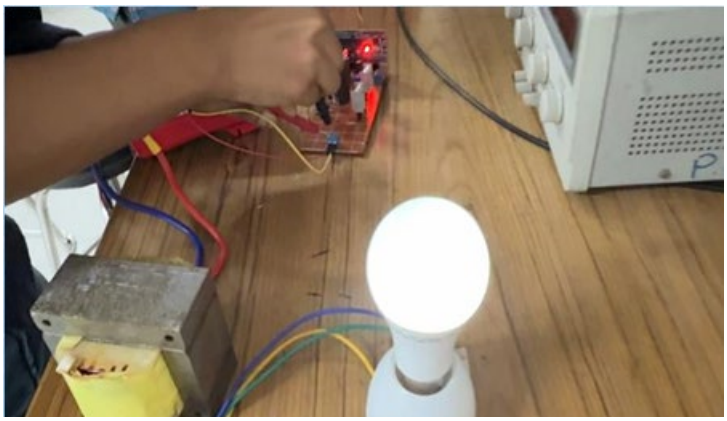

Fig: Output Load(5W)

5 Design Analysis and Evaluation

5.1 Novelty

The proposed project introduces a cost-effective and practical implementation of a DC to AC inverter using Sinusoidal Pulse Width Modulation (SPWM). Unlike conventional inverter systems that are often complex, bulky, and expensive, this design emphasizes simplicity, affordability, and portability.

One of the key innovative aspects of this work is the utilization of the EGS002 driver module, which significantly simplifies the generation of SPWM signals and gate driving requirements. This reduces design complexity and enhances reliability compared to fully discrete implementations.

Additionally, the system is designed using readily available and low-cost components, making it accessible for educational purposes and small-scale applications. The compact structure of the

hardware further contributes to portability, making it suitable for use in environments where space and cost are critical constraints. Overall, the project successfully demonstrates a balance between performance, simplicity, and economic feasibility.

5.2 Design Considerations (PO(c))

5.2.1 Considerations to Public Health and Safety

During the design and implementation phases, significant attention was given to ensuring user safety and minimizing potential hazards. Proper insulation techniques were applied throughout the circuit to prevent accidental electric shock. Isolation between high-voltage and low-voltage sections was maintained to enhance operational safety.

Thermal management was also considered, as power electronic components such as MOSFETs are prone to heat generation during switching. Appropriate switching techniques and operating conditions were used to limit excessive heat buildup. Furthermore, all testing procedures were conducted under controlled conditions to ensure safe voltage levels and prevent damage to both the system and the user.

5.2.2 Considerations to Environment

Environmental impact was taken into account by designing an energy-efficient system that minimizes unnecessary power losses. The use of low-power components and efficient switching techniques helps reduce overall energy consumption.

In addition, filtering techniques were incorporated to suppress high-frequency harmonics, thereby reducing electromagnetic interference (EMI), which can negatively affect nearby electronic devices. The design approach promotes sustainability by ensuring efficient utilization of energy resources and minimizing environmental disturbances.[5]

5.2.3 Considerations to Cultural and Societal Needs

The inverter system was designed with consideration for real-world societal needs, particularly in regions experiencing frequent power outages. The low-cost nature of the design makes it suitable for low-income households, providing an affordable backup power solution.

Moreover, the portability of the system allows it to be easily deployed in rural or remote areas where access to reliable electricity is limited. This makes the project socially relevant and beneficial for emergency and off-grid applications.

5.3 Investigations (PO(d))

5.3.1 Design of Experiment

An experimental setup was developed to evaluate the performance of the inverter system. A constant

DC input voltage of 12V was supplied to the circuit. A resistive load was connected at the output, and various electrical parameters such as voltage and current were measured.

An oscilloscope was used to observe the output waveform and verify the effectiveness of the SPWM technique in generating a near-sinusoidal signal. The experiment was conducted under controlled laboratory conditions to ensure accurate and repeatable results.

5.3.2 Data Collection

The following data were obtained during experimental testing:

Input Voltage, Vs=12V

Input Current, Is=1.45A

Output Voltage, Vo=63.3V

Output Current, Io=0.02273A

Load Power Rating = 5W ,V=220V

These values were used to calculate system performance parameter such as input power, output power and efficiency.

5.3.3 Results and Analysis

The performance of the inverter was evaluated based on power calculations:

- **Input Power:**
  Pin=Vs*Is=12×1.45=17.4W
- **Output Power:**

  Output Resistance = $\frac{V^2}{P}$ =9680 ohm
  Pout=Vo×Io=1.4369W
- **Efficiency:**
  η=$\frac{Pout}{Pin}$×100%=8.258%

The results indicate that although the inverter successfully converts DC to AC and produces the desired waveform, the overall efficiency is relatively low. This is primarily due to losses associated with the transformer, MOSFET switching, and other circuit components. These losses significantly reduce the usable output power.

5.3.4 Interpretation and Conclusions on Data

The experimental results confirm that the proposed inverter design is capable of generating a near-sinusoidal AC output waveform, validating the effectiveness of the SPWM technique.

However, the low efficiency highlights the limitations of the current implementation. The system operates correctly in terms of functionality, but performance is affected by various losses. Therefore,

while the design is suitable for demonstration and low-power applications, further improvements are required for practical high-efficiency usage.

5.4 Limitations of Tools (PO(e))

The implementation and evaluation of the project were subject to several limitations due to the tools and components used. The transformer introduces both core and copper losses, which reduce the output voltage and overall system efficiency, especially under load conditions.

Additionally, standard laboratory instruments such as digital multimeters are not capable of accurately measuring high-frequency ripple components present in SPWM signals. This limits the precision of measurements.

Furthermore, MOSFET switching losses and non-ideal characteristics of components contribute to performance degradation. The use of basic lab equipment also restricts the accuracy and depth of analysis that could be achieved.

5.5 Impact Assessment (PO(f))

5.5.1 Assessment of Societal and Cultural Issues

The developed inverter has significant potential to address societal challenges related to power shortages. It can serve as a reliable backup power source during load-shedding, particularly in developing regions.

Its affordability makes it accessible to low-income users, thereby contributing to improved quality of life. The design also aligns with the needs of communities requiring portable and simple power solutions.

5.5.2 Assessment of Health and Safety Issues

While the system is beneficial, improper handling can pose safety risks such as electric shock. Therefore, proper insulation, grounding, and user awareness are essential.

Heat generation within the circuit components also requires attention, as excessive temperature may lead to component failure or hazards. Adequate cooling mechanisms should be considered in future designs.

5.5.3 Assessment of Legal Issues

For real-world deployment, the inverter must comply with relevant electrical safety and regulatory standards. Proper wiring, insulation, and adherence to safety guidelines are necessary to ensure legal compliance.

Failure to meet these standards could result in operational risks and legal consequences.

5.6 Sustainability Evaluation (PO(g))

The system demonstrates good potential for sustainable energy applications. Since it operates on low-voltage DC input, it can be easily integrated with renewable energy sources such as solar panels.

The efficient use of energy and the possibility of battery-based operation make the design suitable for off-grid and environmentally friendly applications. With further optimization, the system can contribute to sustainable power solutions.

5.7 Ethical Issues (PO(h))

Ethical considerations were maintained throughout the project. All experimental data and results were obtained through genuine testing without any form of manipulation.

Proper acknowledgment of references, design concepts, and external resources was ensured. Additionally, safety precautions were followed during experimentation to prevent harm to individuals and equipment.

The project reflects adherence to professional and academic ethical standards.

6 Reflection on Individual and Team work (PO(i))

6.1 Individual Contribution of Each Member

Student ID	Name	Contribution
2106177	**Tonmoy Deb**	Software Circuit Simulation, Debugging, Presentation, Report
2106181	**Mushfiqur Rahman**	Hardware Implementation, Debugging, Presentation, Report
2106182	**Chayan Paul**	Hardware Implementation, Debugging, Presentation, Report
2106183	**Shamin Yeaser**	Software Circuit Simulation, Debugging, Presentation, Report
2106184	**Kayes Sami Malitha**	Hardware Implementation, Debugging, Presentation, Report

6.2 Mode of TeamWork

- Tasks were distributed among team members based on individual expertise and technical strengths.
- A balanced workload was maintained to ensure efficient progress of the project.
- Regular group meetings and discussions were conducted to review progress and resolve issues.
- Collaborative decision-making was followed for design and implementation choices.
- Team members actively supported each other in solving technical problems.
- Effective communication ensured smooth coordination and timely completion of project milestones.

6.3 Diversity Statement of Team

- The team consisted of members with diverse skill sets, including analysis, hardware design, simulation, and documentation.
- Each member contributed unique perspectives, enhancing problem-solving capability.
- The combination of theoretical and practical expertise improved design quality.
- Diversity in skills enabled efficient handling of different project components.

6.4 Log Book of Project Implementation

Week	Activity	Description	Individual Role (Student ID)	Team Role
4-5	Literature Study	Studied inverter basics, DC–AC conversion, SPWM	2106177, 2106183	Group discussion, idea sharing
6	Circuit Design	Designed H-Bridge inverter circuit	2106181, 2106184	Design validation, component selection
7	Simulation	Simulated inverter and SPWM output	2106177, 2106183	Result verification, debugging support
8	Hardware Implementation	Built circuit on breadboard	2106181, 2106182, 2106184	Assembly, connection checking
9–10	Testing & Debugging	Tested waveform and fixed errors	2106177, 2106183	Debugging, performance checking
11–12	Veroboard Implementation	Final hardware build on veroboard	2106181, 2106182	Final assembly, soldering
13–14	Performance & Documentation	Verified output, report & presentation	2106177, 2106182, 2106184	Final testing, report writing

7 Communication to External Stakeholders (PO(j))

7.1 Executive Summary

This project presents the design and implementation of a low-cost DC to AC inverter using a Sinusoidal Pulse Width Modulation (SPWM) technique. The system converts a 12V DC input into an AC output through an H-bridge configuration controlled by an EGS002 driver module. The objective is to develop a compact, portable, and economical solution suitable for small-scale applications and areas experiencing power shortages. Experimental results demonstrate successful generation of a near-sinusoidal waveform, although efficiency is limited due to component losses. The project highlights practical challenges in inverter design while providing a foundation for further performance improvement and real-world applications.

7.2 User Manual

The operation of the inverter system should follow the steps below:

- Connect a stable 12V DC power supply to the input terminals, ensuring correct polarity.
- Verify that all circuit connections are secure and properly insulated.
- Connect an appropriate load to the output side of the inverter.
- Switch on the power supply to activate the system.
- Observe the AC output using a load or measurement device.
- Avoid overloading the system beyond its rated capacity to prevent damage.
- After use, disconnect the power supply safely.

7.3 Github Link

https://github.com/intmushfiq/H-Bridge-Inverter

7.4 YouTube Link

https://youtu.be/8z-EmOS5n8s

8 Project Management and Cost Analysis (PO(k))

8.1 Bill of Materials

Component	Price (BDT)
IC (SG3525)	50
IC Holder	50
Step-up Transformer (12V-220V)	280
MOSFET IRF3205	276
Multimeter Probe	120
Soldering Lead	200
BC547 Transistor	20
1N4007 Diode	20
Capacitors & Resistors	94
Optocoupler	45
Additional Capacitors	22
Shipping	175
Jumper	90
Misc Components	45
1k Pot	30
220Ω 5W Resistors	18
Multimeter Battery	60
47Ω 5W	40
Transformer	1000
EGS002	900
Transportation	100
Jumper Wire	210
Bulb 5W	120
EGS002	800
Box	100
Diode + Transport	85

8.2 Calculation of Per Unit Cost of Prototype

The total cost required to develop the prototype inverter system is:

Total Cost = 4950 BDT

Since the project was completed by 5 members:

Cost per person = 990 BDT

This demonstrates that the project was implemented in a cost-effective manner, making it suitable for low-budget applications.

8.3 Calculation of Per Unit Cost of Mass-Produced Unit

In mass production, the cost per unit is expected to decrease significantly due to:

- Bulk purchasing of components at reduced prices
- Elimination of repeated transportation and shipping costs
- Use of optimized PCB design instead of manual wiring
- Reduced labor and assembly time

Therefore, the estimated cost per unit in large-scale production would be considerably lower than the prototype cost, making the design economically viable for commercial applications.

9 Future Work (PO(l))

Although the proposed inverter system successfully demonstrates DC to AC conversion using the SPWM technique, there remains significant scope for further improvement and optimization.

One of the primary areas for future development is the enhancement of overall system efficiency. This can be achieved by using a higher-quality transformer with lower core and copper losses, as well as selecting MOSFETs with lower on-state resistance to minimize conduction losses.

In addition, more advanced modulation techniques, such as modified SPWM or space vector PWM, can be implemented to improve waveform quality and reduce harmonic distortion. Incorporating a closed-loop feedback control system would enable automatic voltage regulation, ensuring a stable output voltage under varying load conditions.

Furthermore, replacing the current veroboard implementation with a custom-designed PCB would significantly improve circuit reliability, reduce noise, and enhance compactness. Future work may also include integrating protection features such as overcurrent, overvoltage, and thermal shutdown mechanisms to make the system more robust and suitable for practical applications.

Overall, these improvements would contribute to developing a more efficient, reliable, and commercially viable inverter system.

10 References

1. *Swagatam. (2025, February 21). EGS002 Datasheet, Circuit Diagram explained.* *https://www.homemade-circuits.com/egs002-datasheet-circuit-diagram-explained/*

2. *H-Bridges – The Basics | Modular Circuits*. (n.d.). https://www.modularcircuits.com/blog/articles/h-bridge-secrets/h-bridges-the-basics/

3. *Pulse Width Modulation (PWM) Techniques. (n.d.).* *https://www.monolithicpower.com/en/learning/mpscholar/power-electronics/dc-ac-converters/pulse-width-modulation-techniques?srsltid=AfmBOoreMfhJriNdWMnqQAtuQfHYzUl07lZIt4YzADPTD5Udp3YnZ_yx*

4. *Jason. (n.d.). A guide to IRF3205 MOSFET features, packaging, and functionality.* *https://www.ic-components.com/blog/A-Guide-to-IRF3205-MOSFET-Features-Packaging-and-Functionality.jsp*

5. *Electrical Volt. (2025, July 19). Effects of harmonics on power systems and electrical equipment. https://www.electricalvolt.com/adverse-effects-of-harmonics-on-electrical-equipments/?utm_source=chatgpt.com*